Waldhornstrasse 12
D-88662 Überlingen
Fon: +49 (0) 7551.1234
Fon: +49 (0) 7551.4444
Fax: +49 (0) 7551.918888
www.winkler-technik.com

ORIGINAL U-SCHIENE U-RAIL

Winkler Technik

Plastic Nail KN

for installing rapid mounting rails in concrete and wood

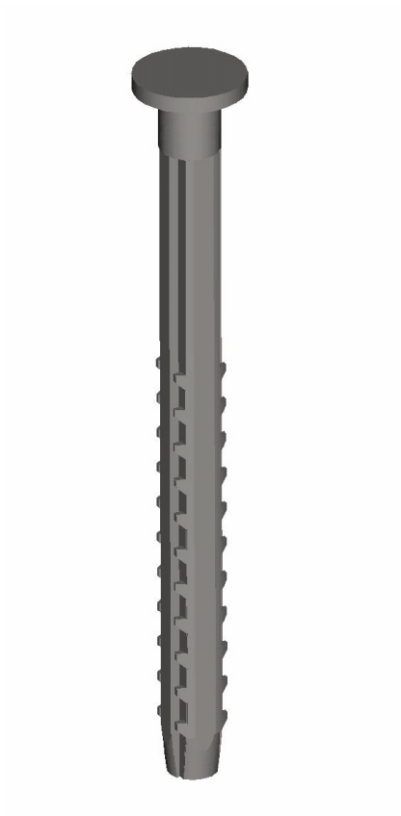

- shaft lengths of 60, 90 and 120 mm (2 3/8”/ 3 1/2”/ 4 3/4”) for different thicknesses of insulation
- the round head of the nail fits perfectly all types of WINKLER TECHNIK - rapid mounting rails
- metal-free fixing of other construction material etc. possible

Technical Data

item No.	length	shaft diameter	colour	packing unit	weight approx.
KN 0608	60 mm (2 3/8”)	8 mm (5/16”)	black	100 / bag, 500 / carton	1,8 kg (3,9 lbs.)
KN 0908	90 mm (3 1/2”)	8 mm (5/16”)	black	100 / bag, 500 / carton	2,6 kg (5,7 lbs.)
KN 1208	120 mm (4 3/4”)	8 mm (5/16”)	black	100 / bag, 500 / carton	3,2 kg (7,0 lbs.)

Subject to technical changes GT 02. 16/01

Plastic Nail KN

Recommended Installation

of plastic nail KN

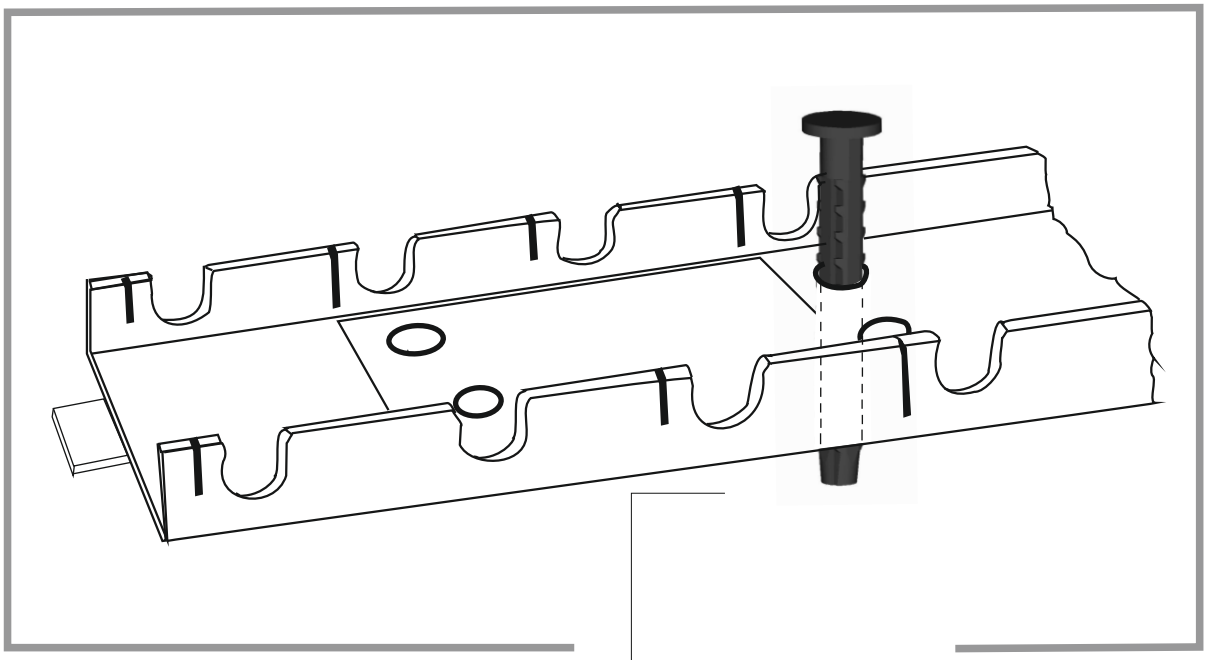

- **Non-slip attachment through the insulation into the floor**
- **Drill a hole of 8 mm**

Subject to technical changes GT 07. 16/02